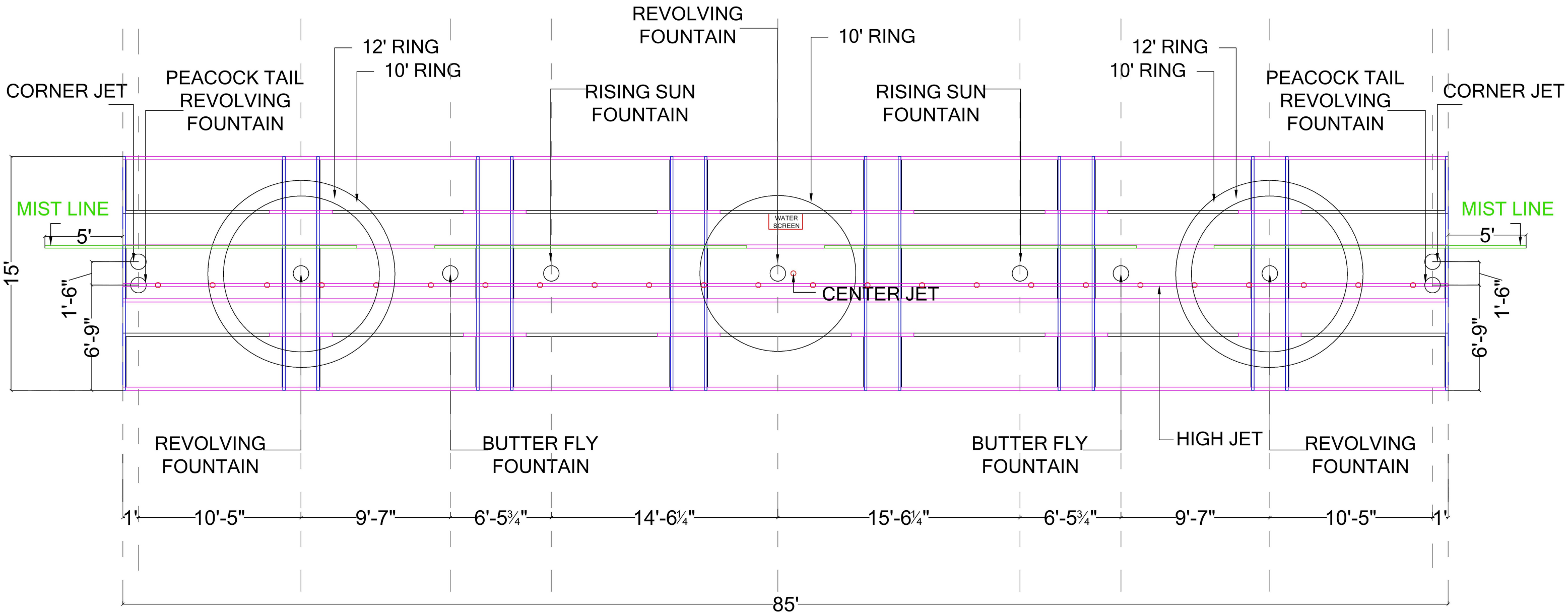
REVOLVING FOUNTAIN
10' RING
12' RING
10' RING
12' RING
10' RING
CORNER JET
PEACOCK TAIL REVOLVING FOUNTAIN
RISING SUN FOUNTAIN
RISING SUN FOUNTAIN
PEACOCK TAIL REVOLVING FOUNTAIN
CORNER JET
MIST LINE
MIST LINE
5'
5'
WATER SCREEN
CENTER JET
15'
1'-6"
6'-9"
1'-6"
6'-9"
REVOLVING FOUNTAIN
BUTTER FLY FOUNTAIN
BUTTER FLY FOUNTAIN
HIGH JET
REVOLVING FOUNTAIN
1'
10'-5"
9'-7"
6'-5¾"
14'-6¼"
15'-6¼"
6'-5¾"
9'-7"
10'-5"
1'
85'